Anchoring guide Crossover L

Version 2.1

Contents

1 Introduction 3
2.1 Anchoring with anchor pins 5
2.2 Anchoring with ballast 6
2.2.1 Anchoring one Crossover L structure foot with ballast 6
2.2.2 Anchoring two Crossover L structure feet with ballast 8
2.2.3 Anchoring three Crossover L structure feet with ballast 11
2.2.4 Anchoring four Crossover L structure feet with ballast 13
2.3 Anchoring at a stage 15

1. Introduction

For a safe use, the Crossover L has to be anchored to the ground surface properly. This guide provides multiple anchoring solutions with their requirements.

Note: Creative Structures BV does not bear responsibility for the installation and foundation.

Two types of anchor points are distinguished:

1. Anchor points at the structure feet (4x)

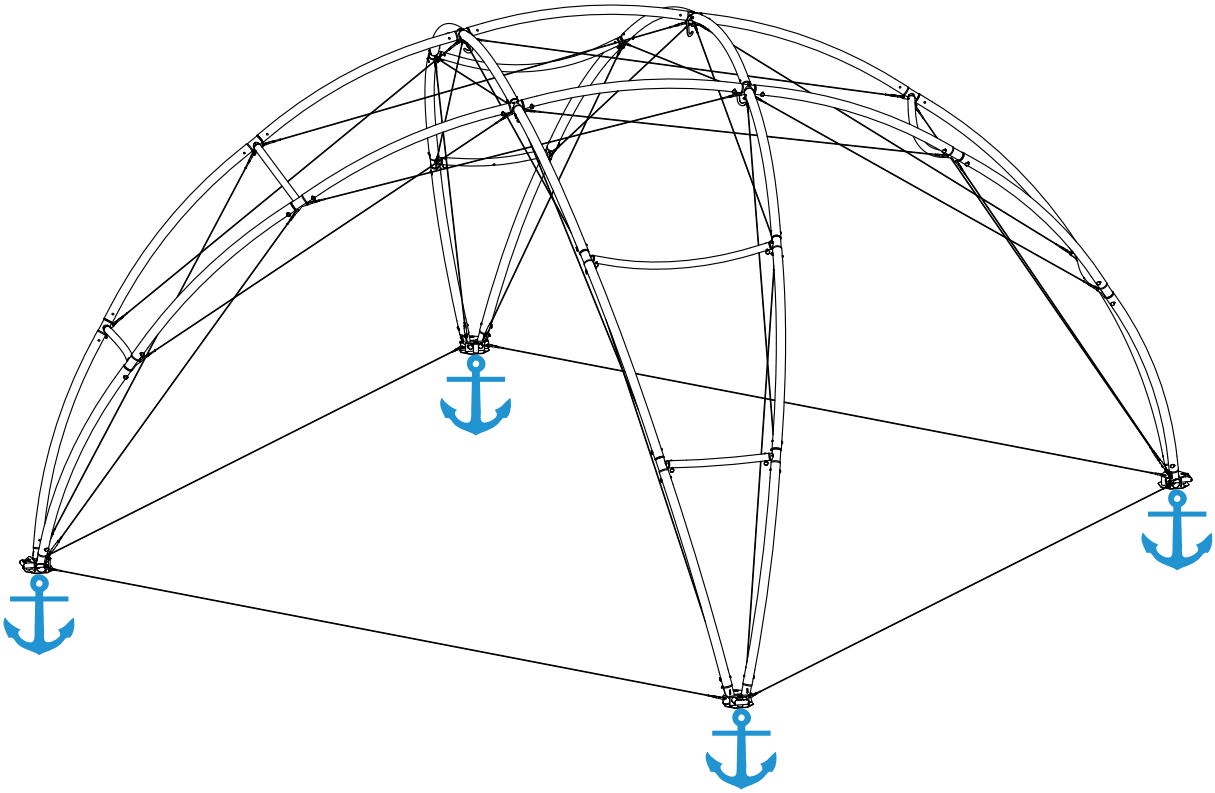

2. Anchor points at the bottom of the side panels (4 per side panel)
   These additional anchor points can be used to decrease the deformation of the side panels but are <u>not necessary</u>.

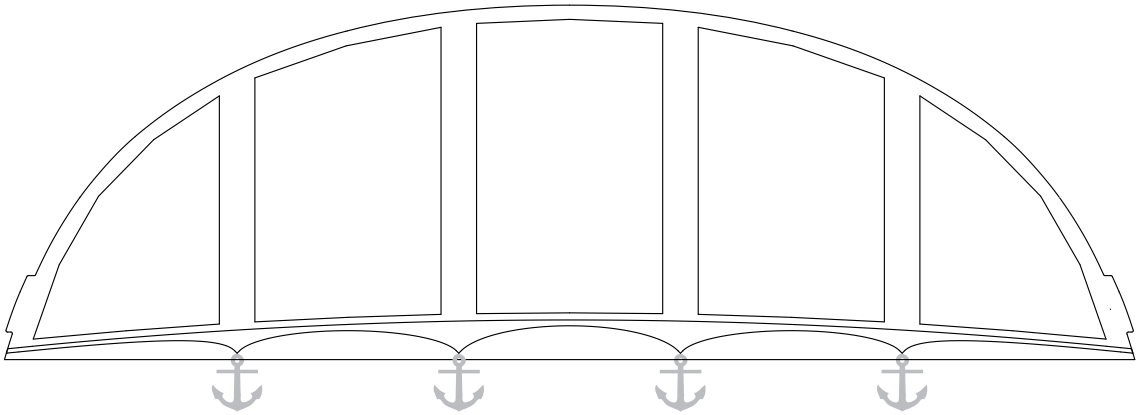

Anchoring guide Crossover L

Anchor point positions

(Also available in digital dxf- and dwg-format)

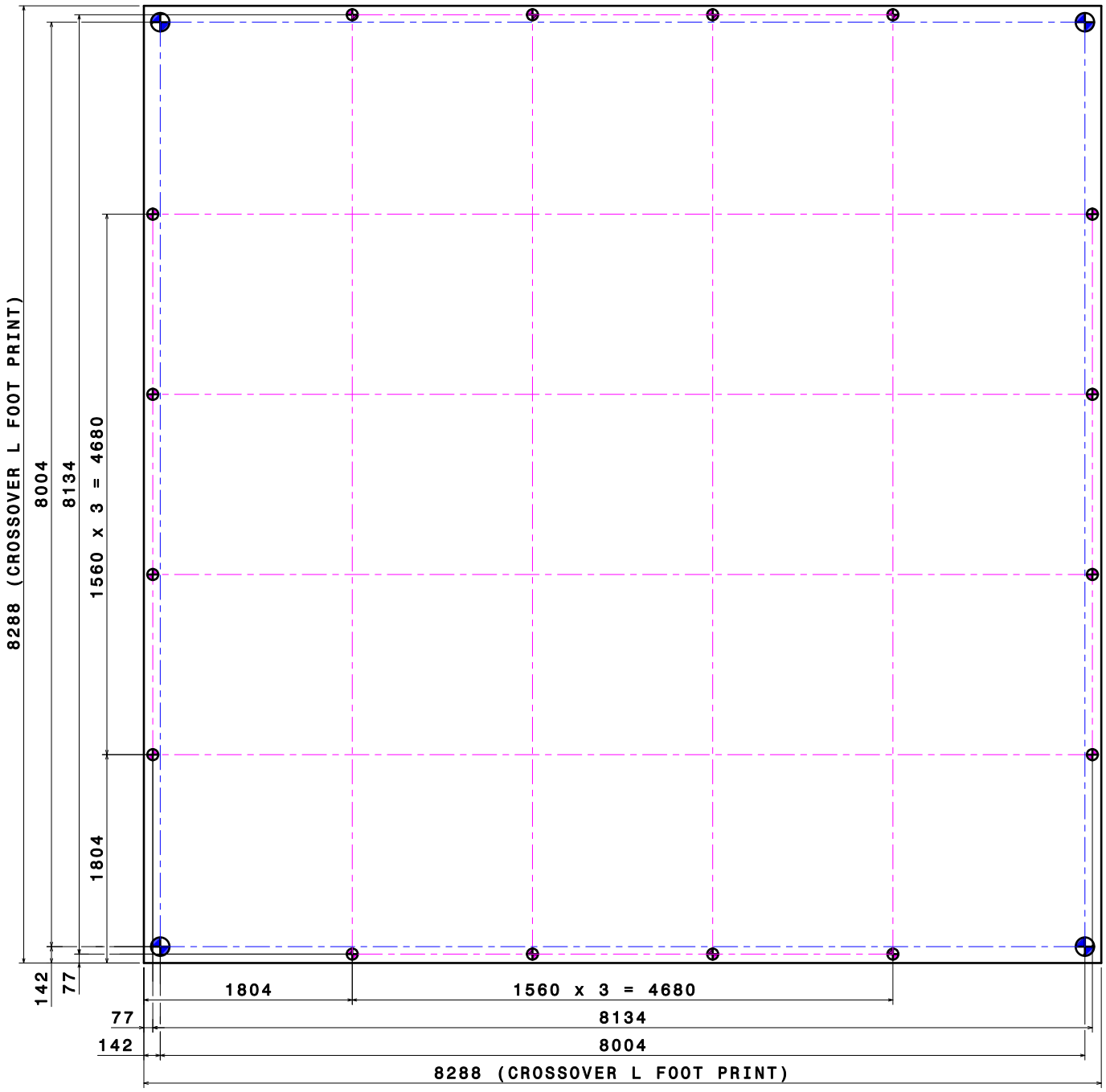

= Anchor point structure foot

= Additional anchor point side panel. (Not necessary)

2.1 Anchoring with anchor pins

The Crossover L can be anchored to dense cohesive less soils (such as sand) or stiff cohesive soils (such as loam or clay) with 2 anchor pins per structure foot.

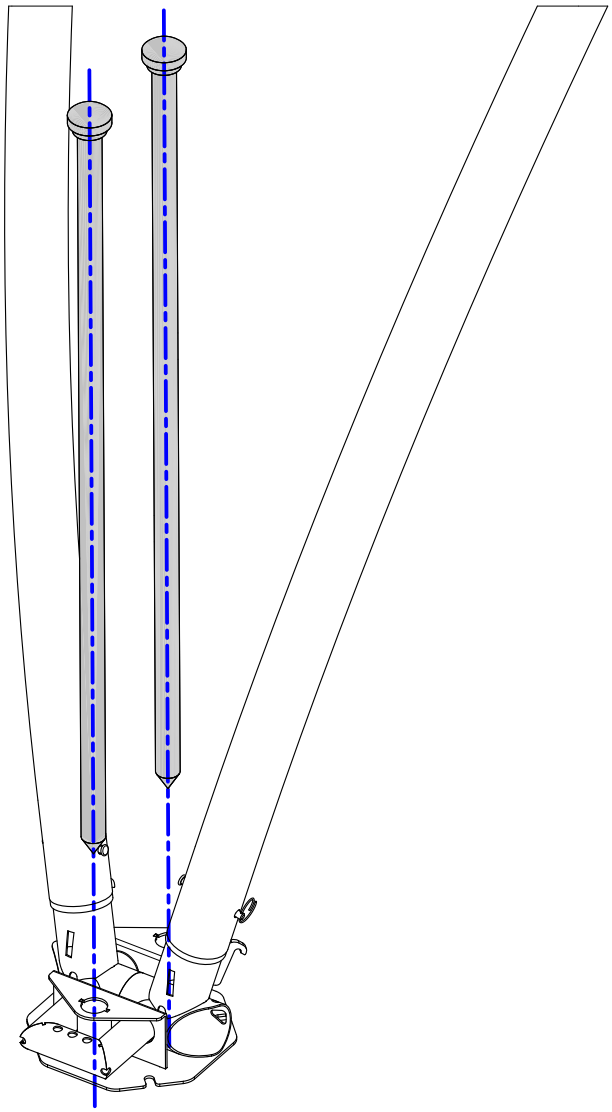

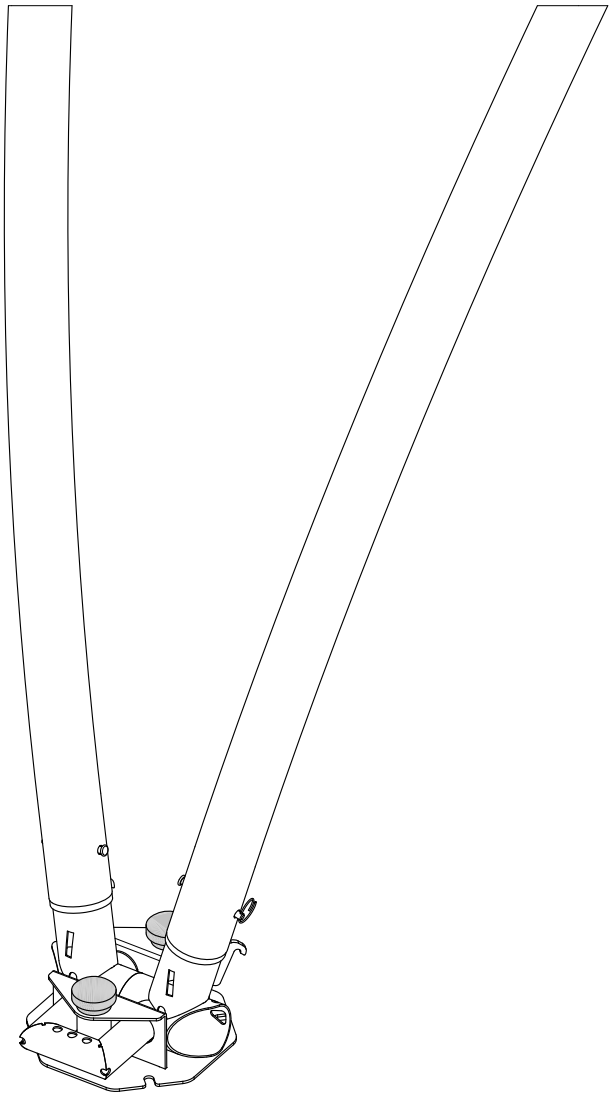

Anchor pin dimensions:

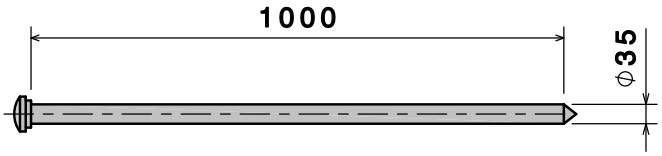

2.2 Anchoring with ballast

The Crossover L can be anchored with ballast by using the additional ballast system. It is possible to connect one, two, three or four structure feet at one anchor point.

2.2.1 Anchoring one Crossover L structure foot with ballast

Step 1

Slide the two ballast supports into the ballast interface and secure it with M12 screws.

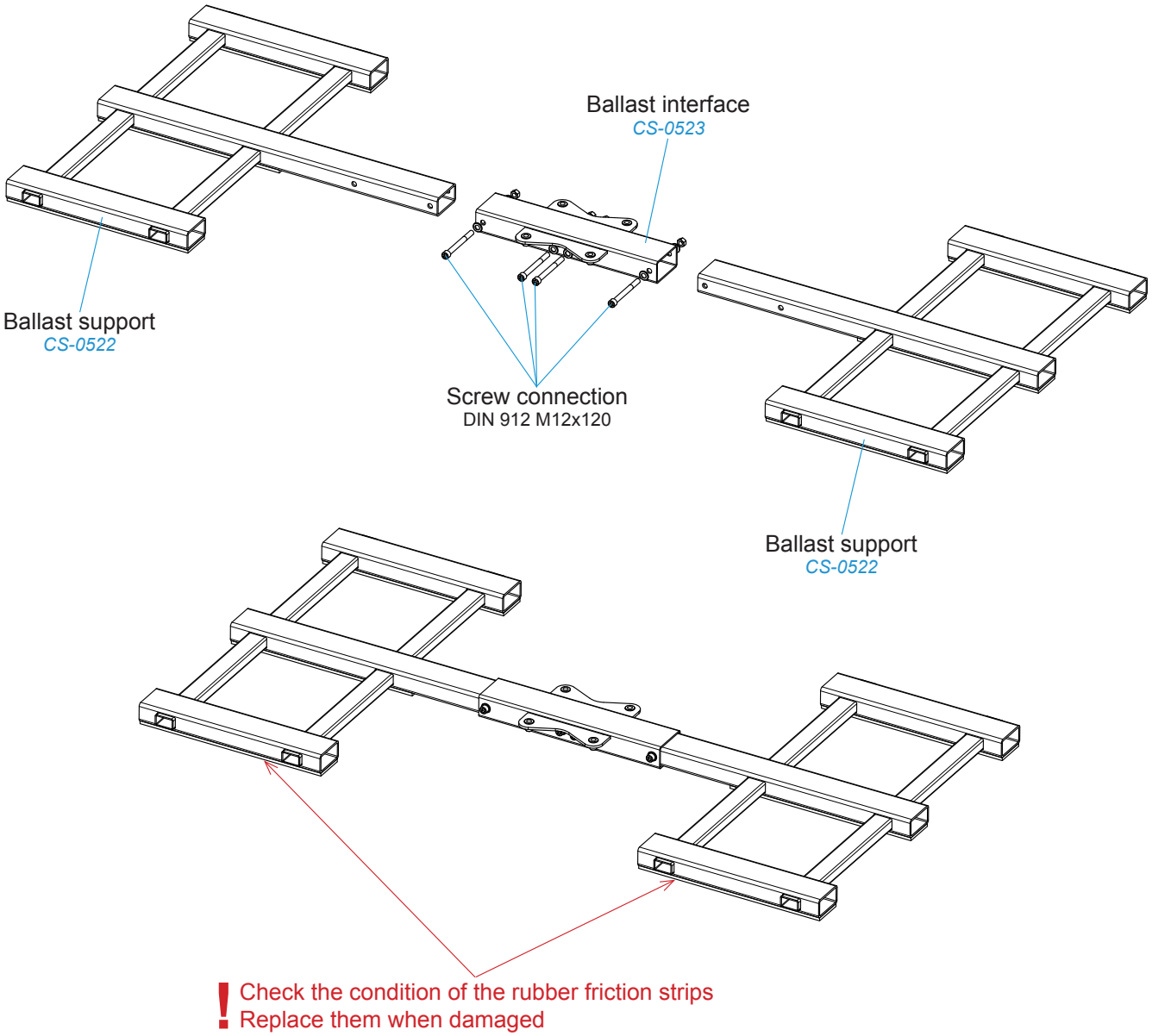

Anchoring guide Crossover L

Step 2

Mount the Crossover L structure foot with M12 screws.

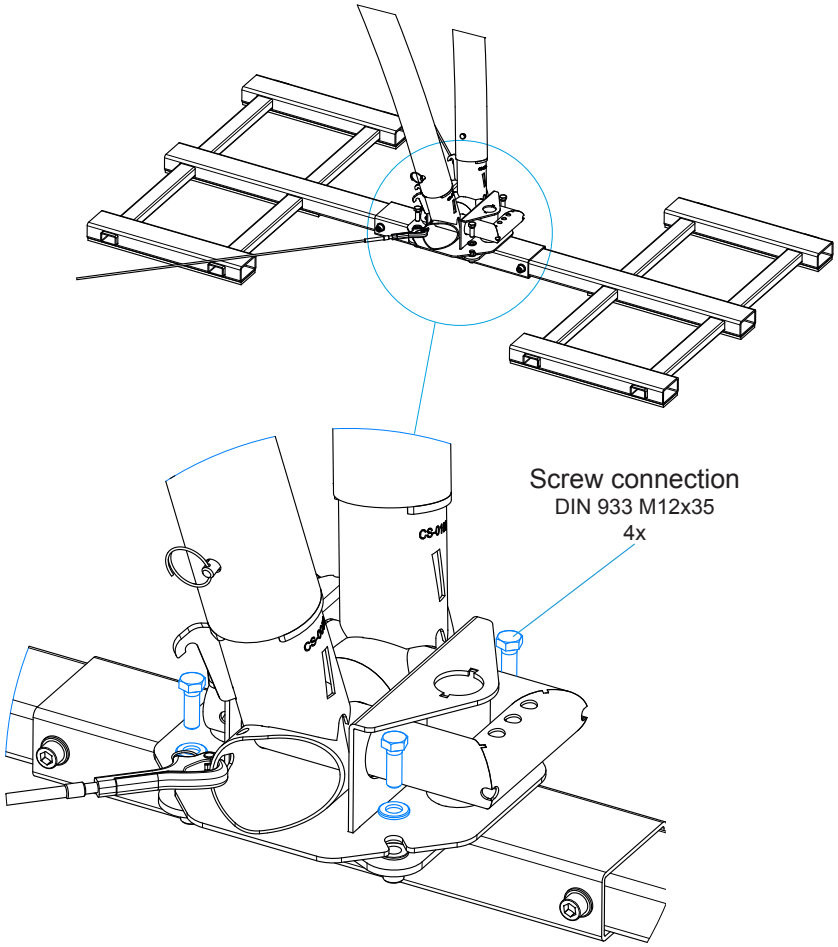

Step 3

Place twentyfour 50x50x4cm concrete tiles at both ballast supports and fasten them with lashings

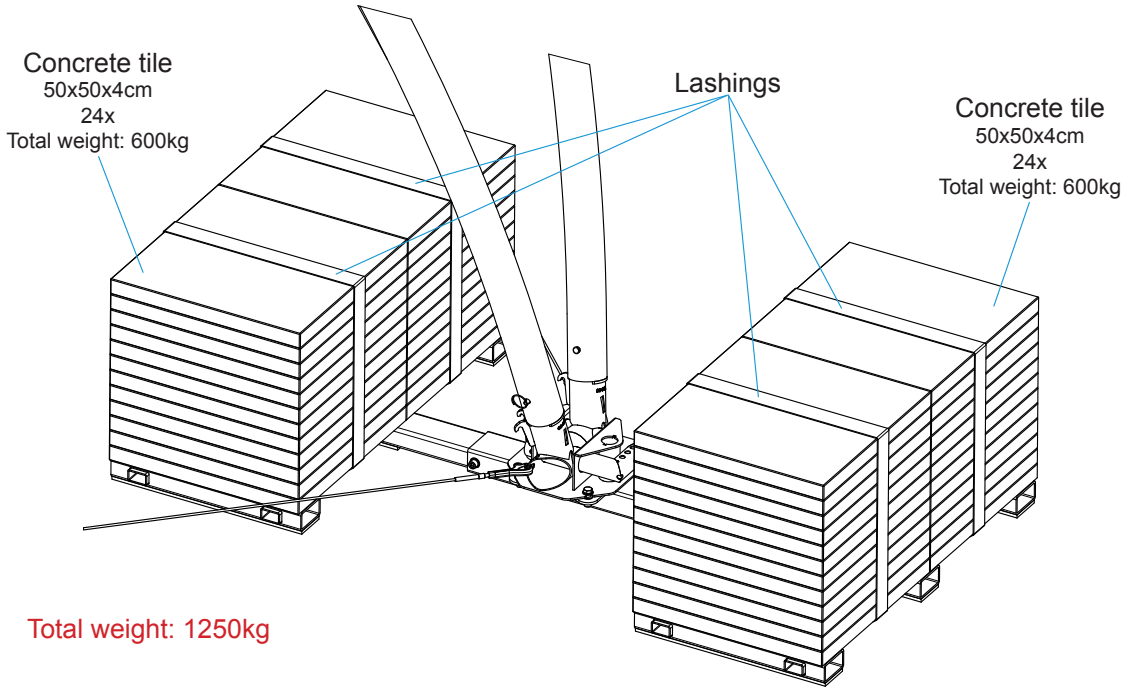

Total weight: 1250kg

2.2.2 Anchoring two Crossover L structure feet with ballast

Step 1

Slide the four ballast supports into the ballast interface and secure it with M12 screws.

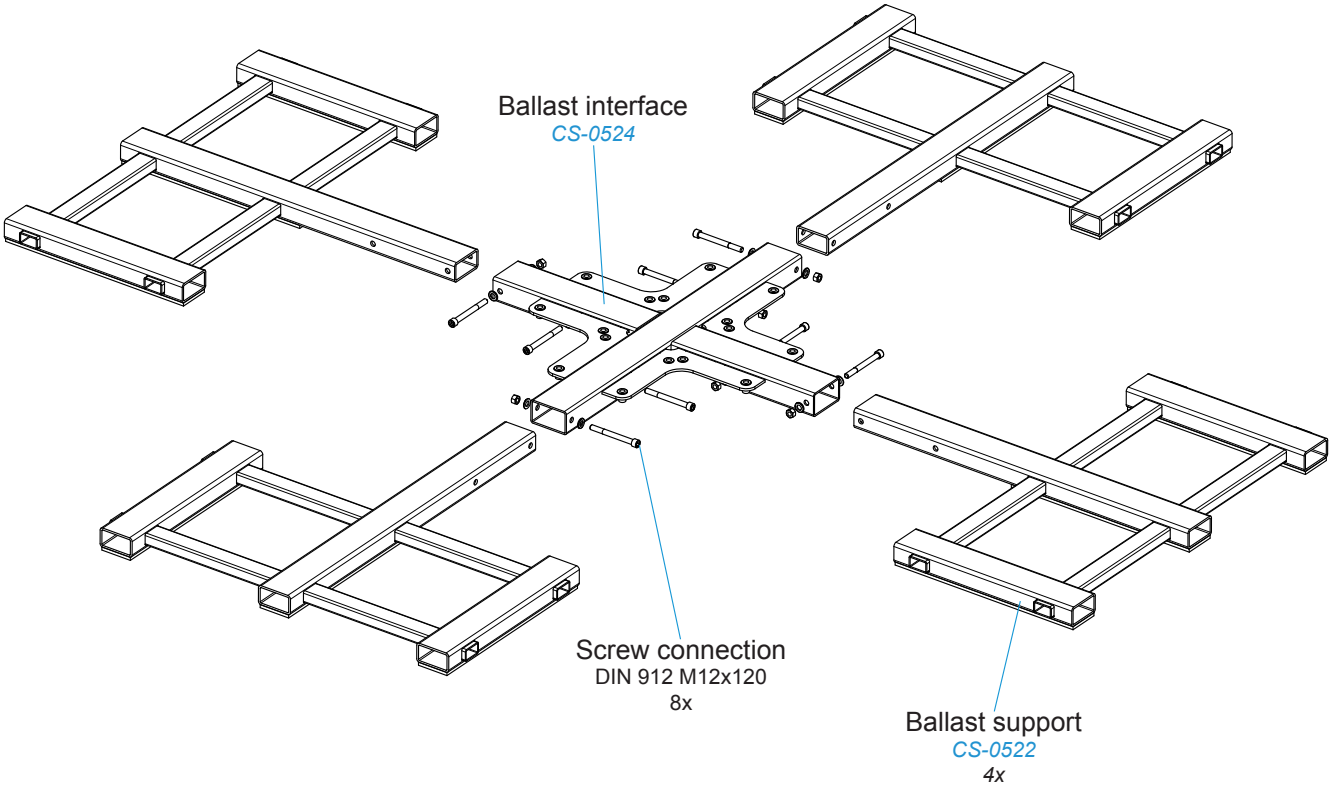

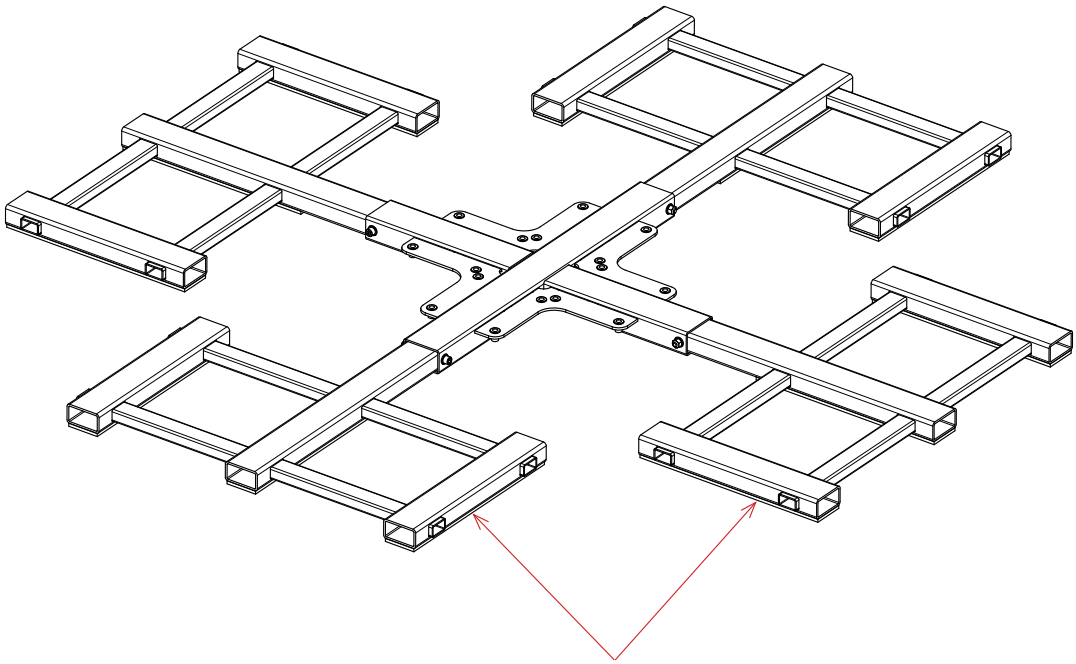

! Check the condition of the rubber friction strips
Replace them when damaged

Anchoring guide Crossover L

Step 2

Mount the two Crossover L structure feet with M12 screws.

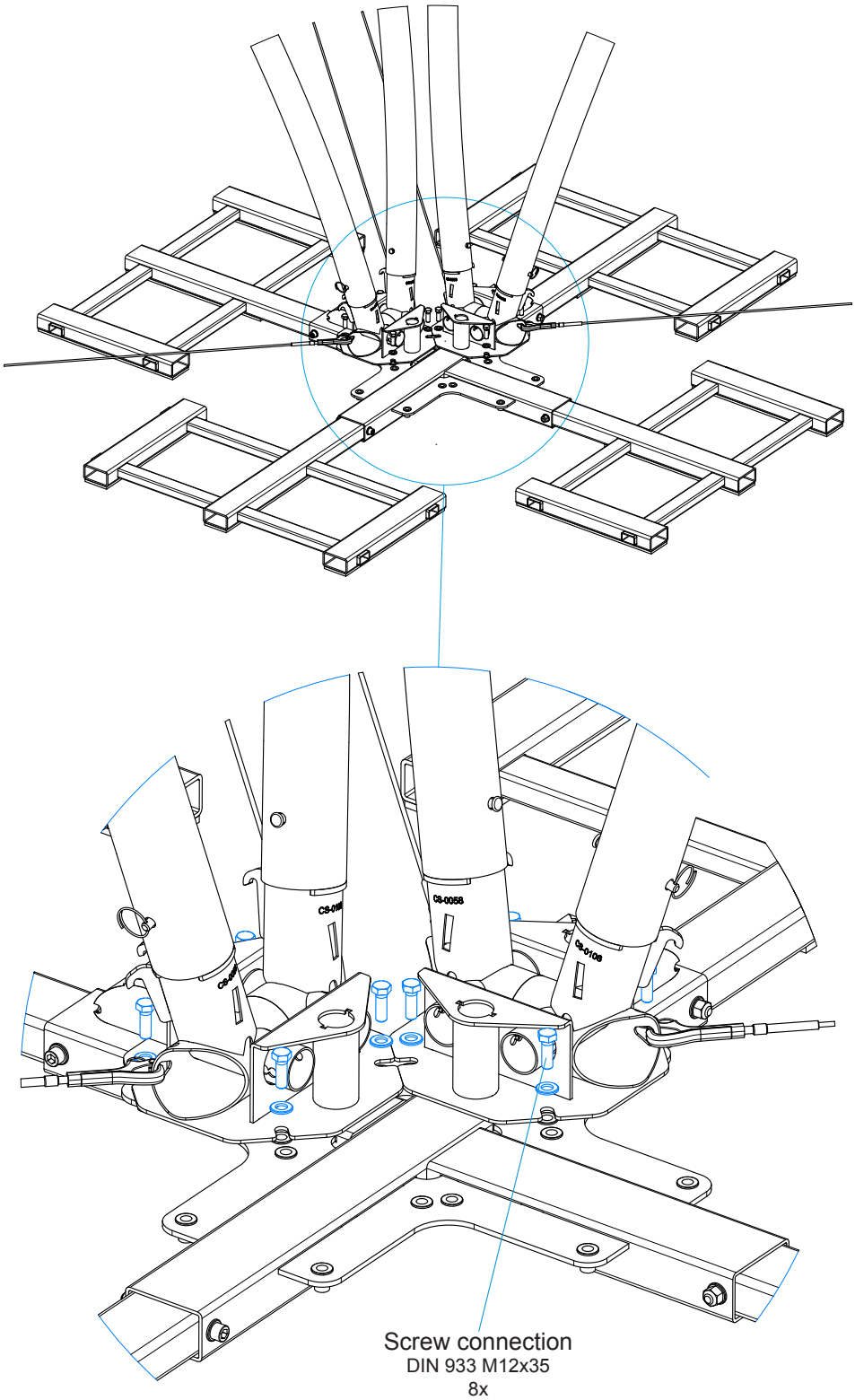

Anchoring guide Crossover L

Step 3

Place twentyfour 50x50x4cm concrete tiles at the four ballast supports and fasten them with lashings

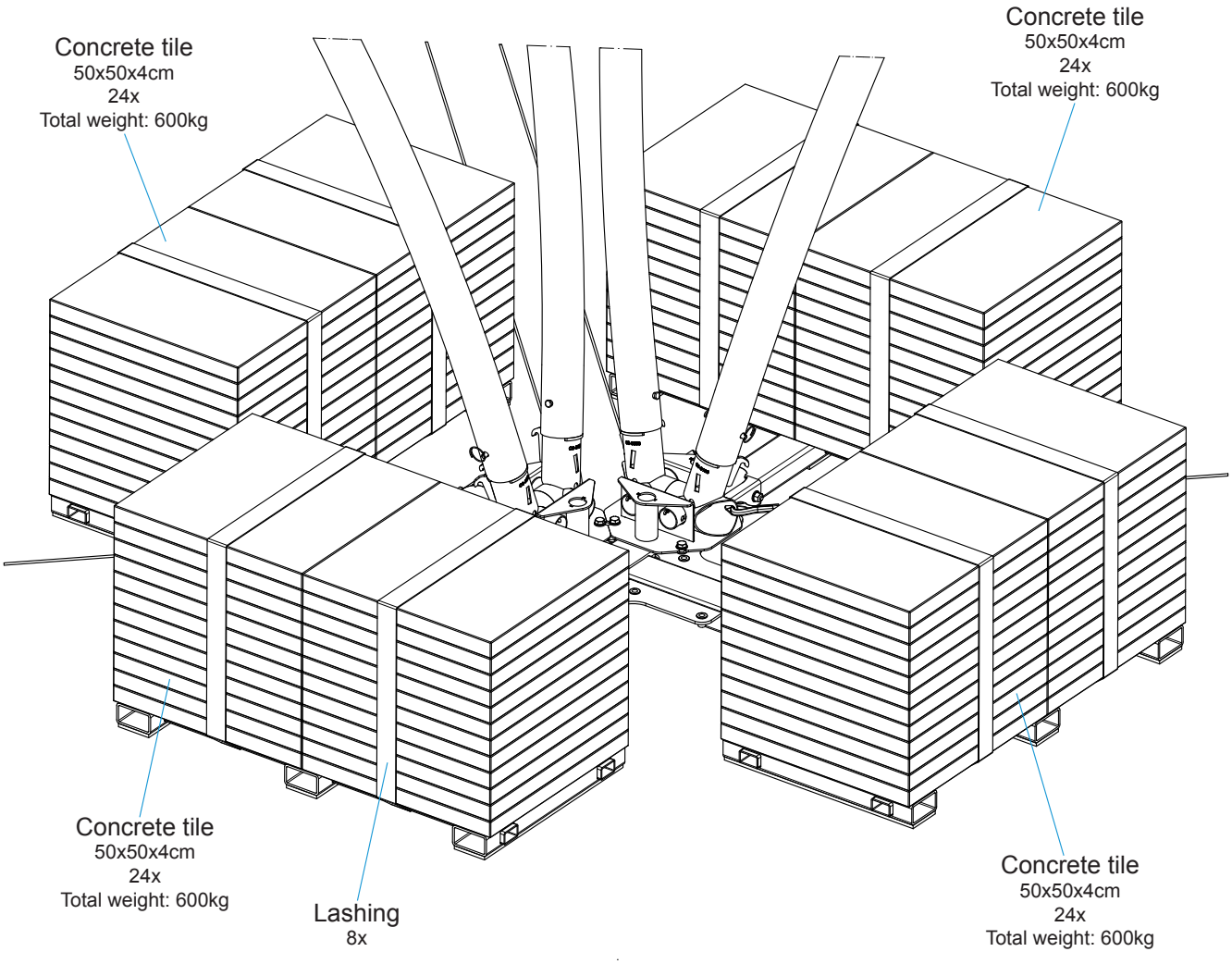

Total weight: 2500kg

2.2.3 Anchoring three Crossover L structure feet with ballast

Step 1

See *step 1 - Anchoring two Crossover L structure feet with ballast*

Step 2

Mount the three Crossover L structure feet with M12 screws.

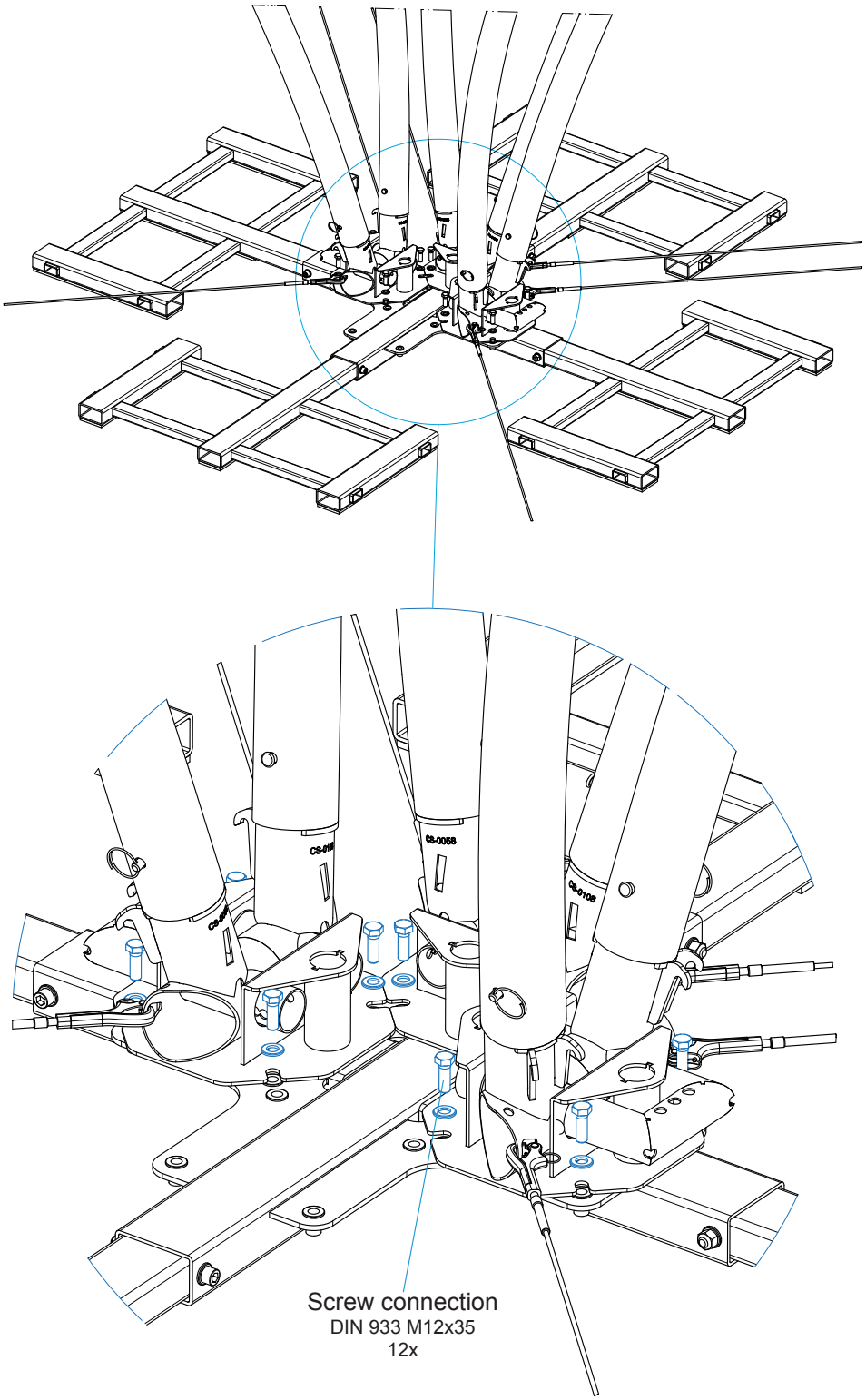

Anchoring guide Crossover L

Step 3

Place twentyfour 50x50x4cm concrete tiles at the four ballast supports and fasten them with lashings

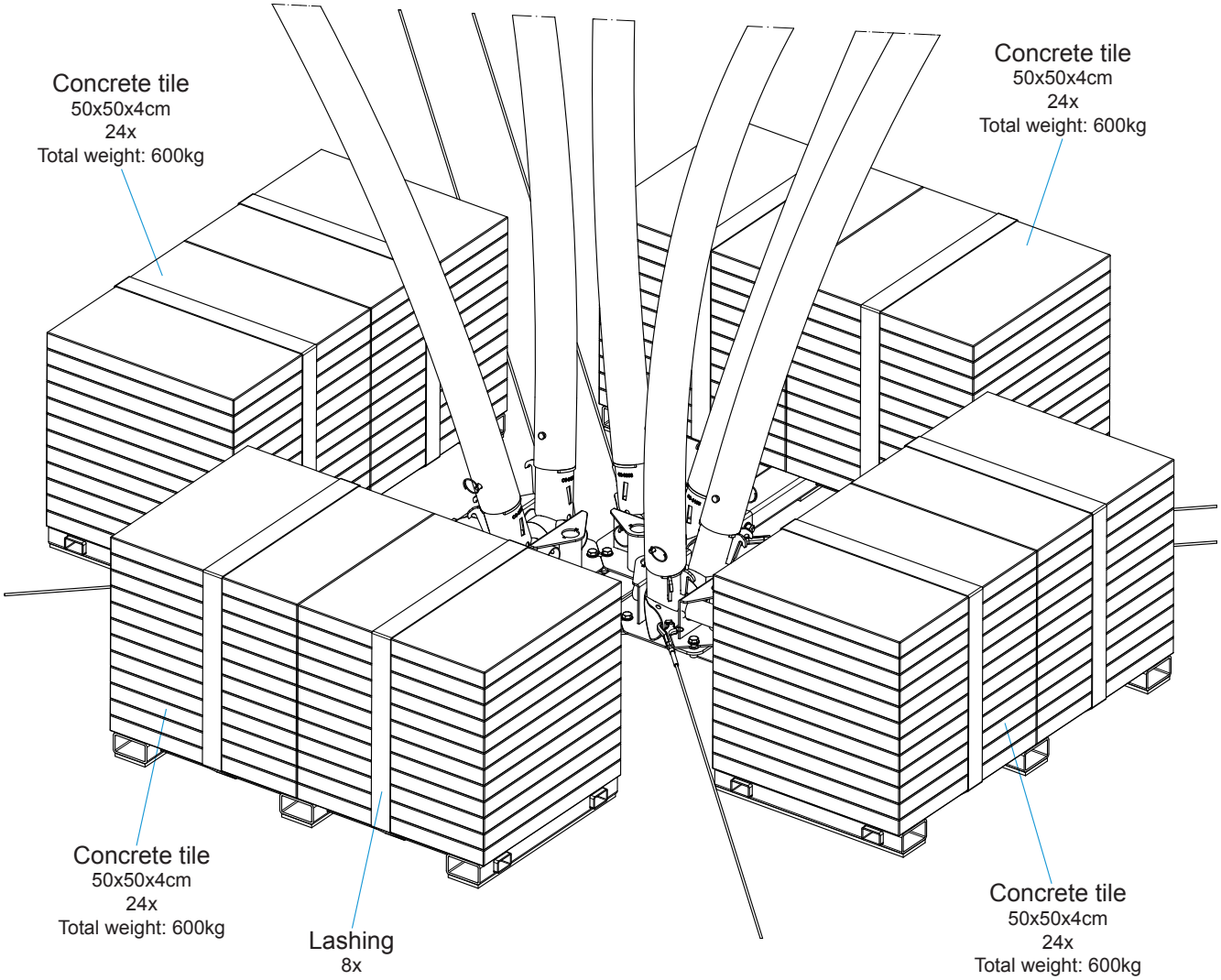

Total weight: 2500kg

2.2.4 Anchoring four Crossover L structure feet with ballast

Step 1

See *step 1 - Anchoring two Crossover L structure feet with ballast*

Step 2

Mount the four Crossover L structure feet with M12 screws.

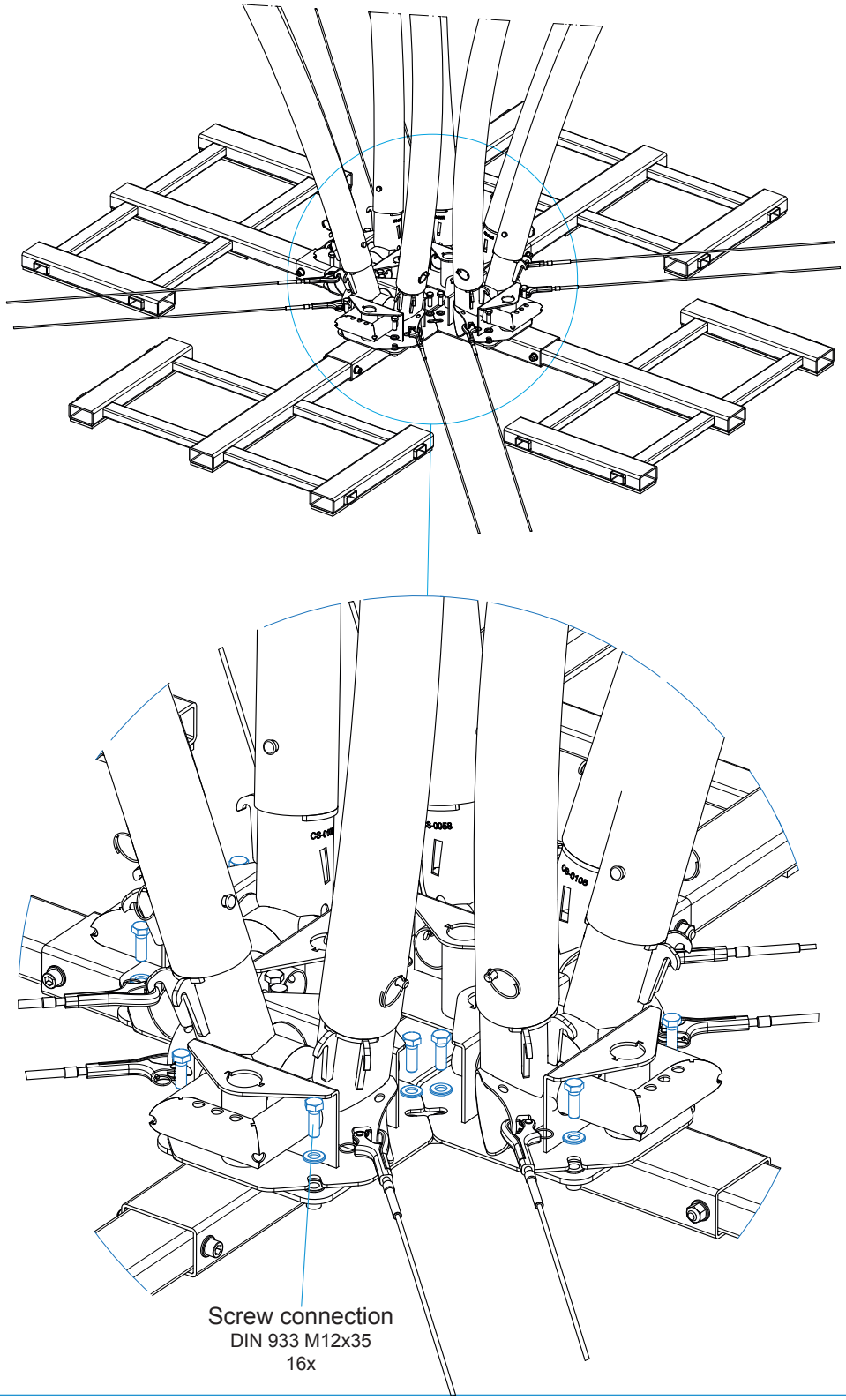

Anchoring guide Crossover L

Step 3

Place twentyfour 50x50x4cm concrete tiles at the four ballast supports and fasten them with lashings

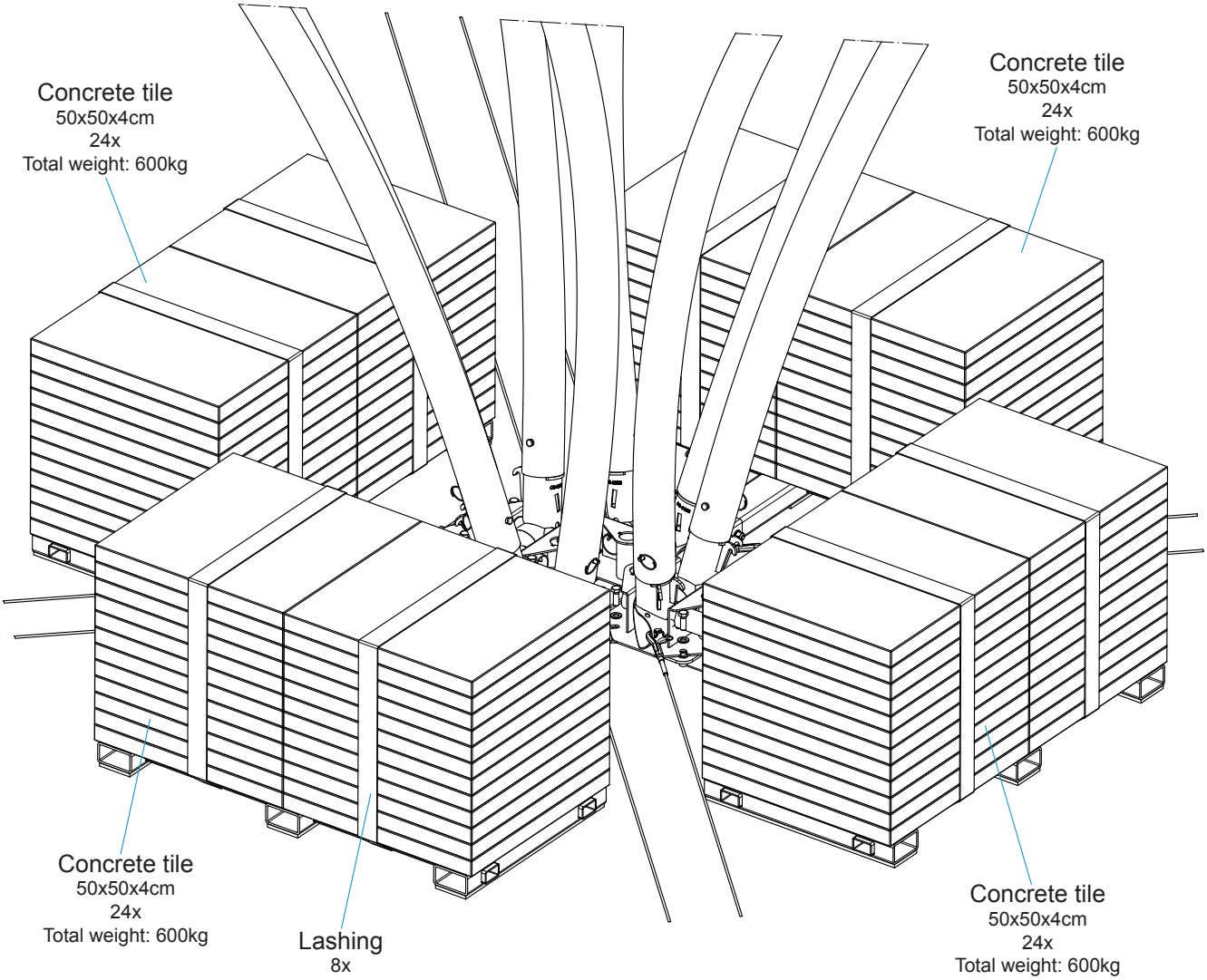

Total weight: 2500kg

2.3 Anchoring at a stage

The Crossover L can be anchored to a stage witch has a pitch of 2072mm (non metric). Therefore the anchor support (CS-0148) has to be removed. Connect the anchor slide (CS-0099) of the structure feet to the vertical tubes of the stage with staging equipment like rosets and wedge head couplers. Consult a stage equipment supplier to select the right parts for the connection. The mechanical requirements of the connections and foundation for different configurations are displayed in the chart on page 16.

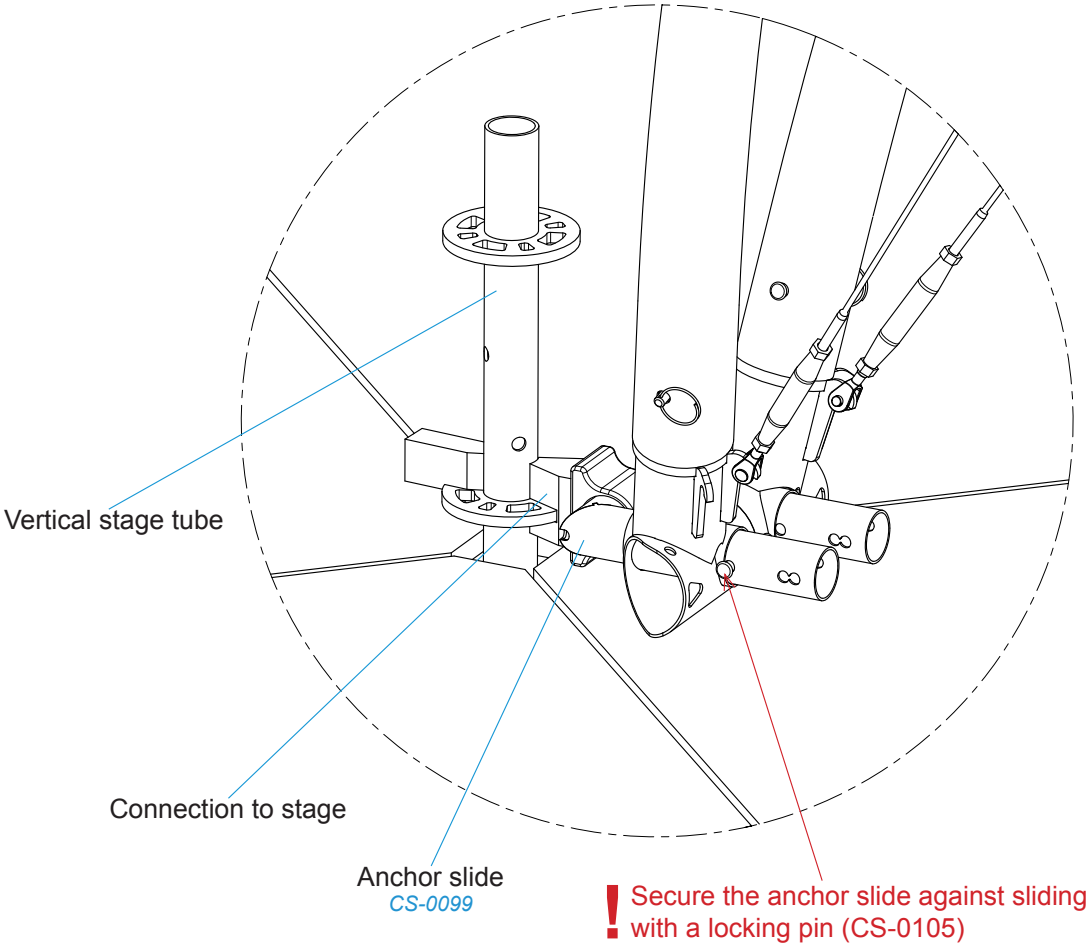

Anchoring guide Crossover L

Up to four Crossover units can be connected to the stage anchoring point

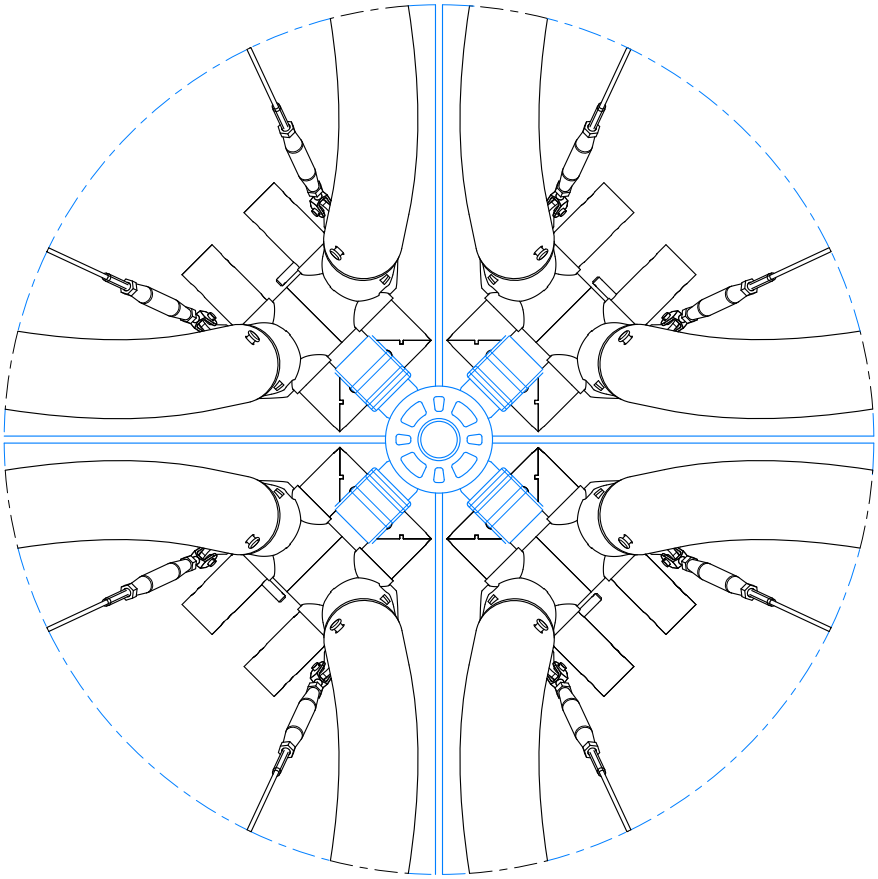

Stage connection requirements table

Anchor forces per structure feet (kN)	
Fx	19,36
Fy	6,70
Fz	-4,39

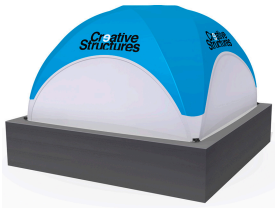

! A negative value for a vertical force means that the direction of the required vertical foundation force is downwards.

! The requirements for the connections and foundation displayed in the table are given for the structure feet of one Crossover unit. When multiple Crossover units are connected to the stage anchoring point, multiply the values with the number of connected units. So when four Crossover units have to be connected at one anchor point, the values of the table have to be multiplied with four.

! The requirements for the connections and foundation, displayed in the table, are based on a placement on the stage deck. When the structure is installed “floating” above the stage deck, the requirements have to be calculated for the specific situation.